STANDARD No. 2-6 TO 2-20 PAVED SHOULDER INLETS

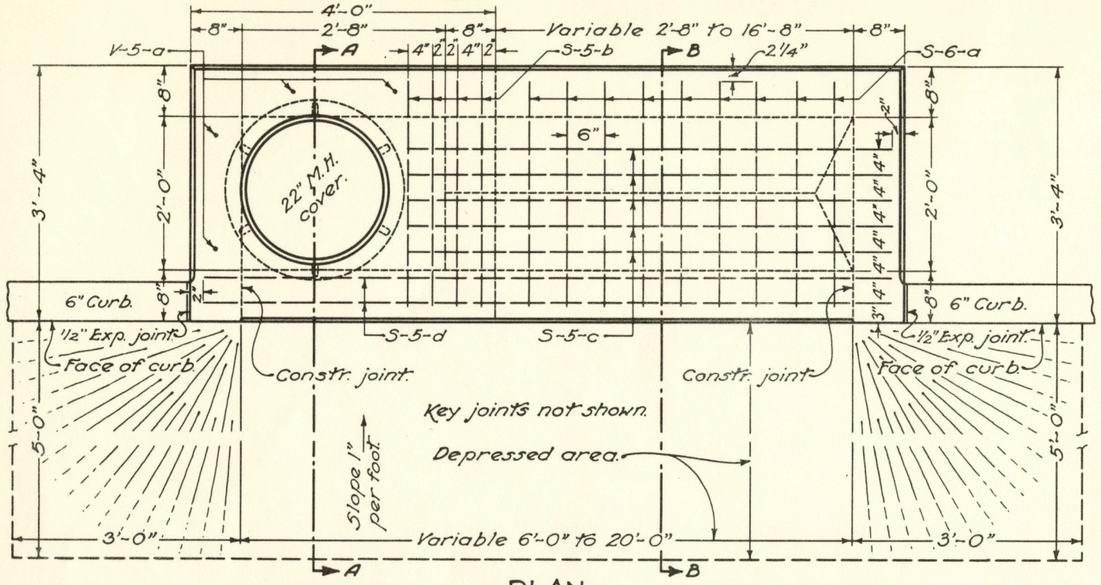

PLAN

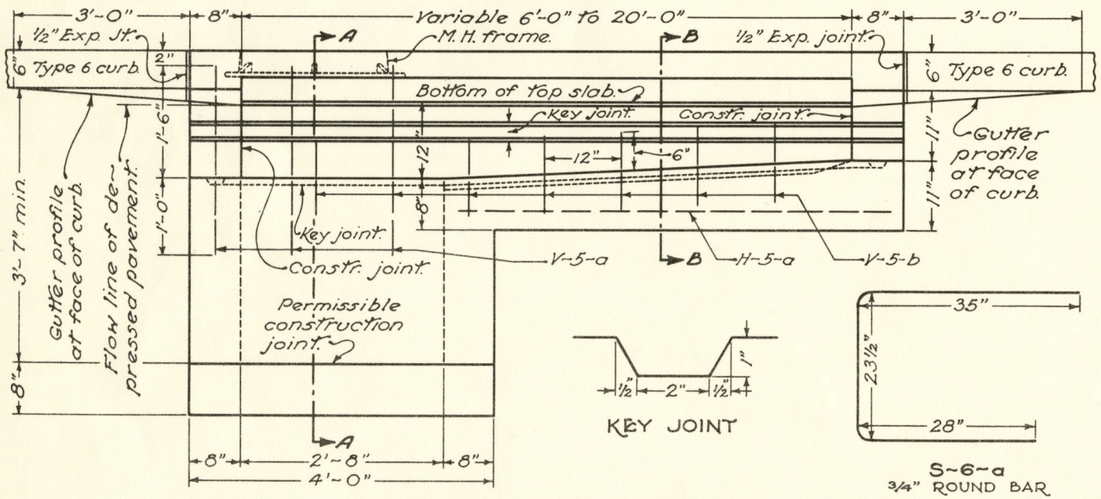

FRONT ELEVATION

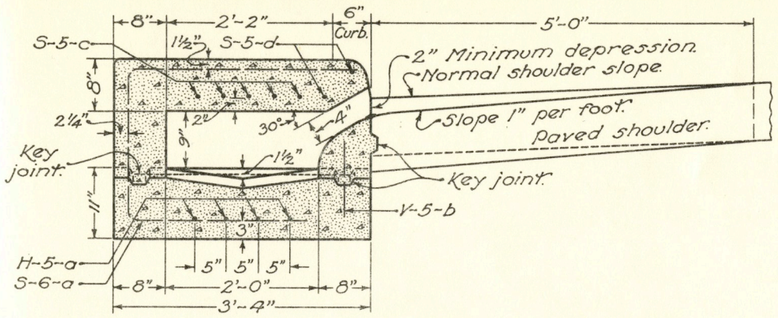

SECTION B-B

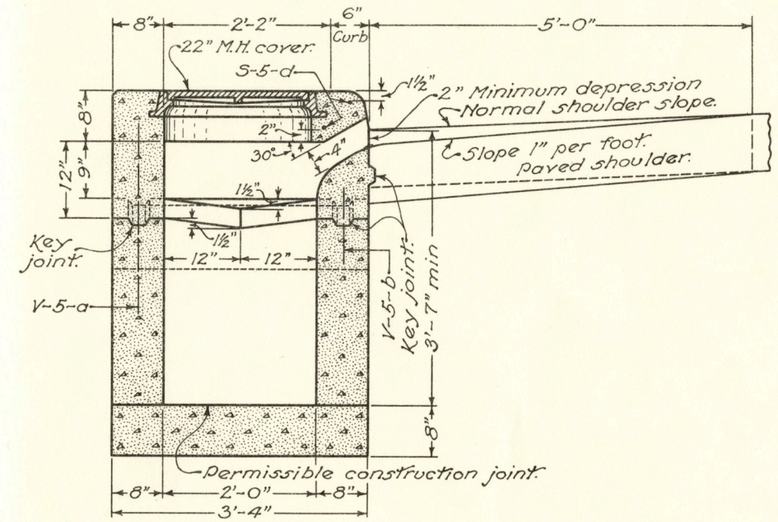

SECTION A-A

NOTES

CASTINGS shall meet the requirements of Item I-8. The design shall be essentially the same and equally as strong as those shown hereon and shall be given one coat of paint as per specifications.

Bearing areas of frame and cover shall be so fitted and finished as to provide a firm and even seat for the entire cover in the frame. No projections shall exist on bearing areas of either casting and the cover shall seat in its frame without rocking.

Minimum weight of frame and cover 150 pounds.

REINFORCING STEEL:— All straight bars shall be 5/8 inch round. Bent bars shall be 3/4 inch round in accordance with steel details shown hereon and conforming to Item S-4 of the Construction Materials Specifications. Cost of furnishing and placing reinforcing steel shall be included in Item I-8 for payment.

CONCRETE cast in place to be Class "C".

END WALLS:— The sections of the end walls above the key joint may be of brick or concrete block construction.

QUANTITIES of curb within the limits of the inlet shall be deducted from the project quantities.

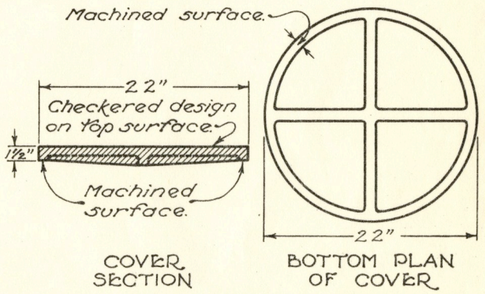

MANHOLE COVER

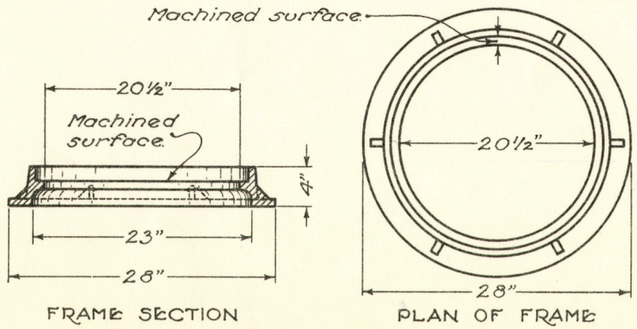

MANHOLE FRAME

CONCRETE AND REINFORCING STEEL QUANTITIES

LENGTH FT.	CONCRETE CU. YDS.	S-6-a		S-5-b		S-5-c		S-5-d		H-5-a		V-5-a		V-5-b		WEIGHT IN LBS.
		NO.	LIN. FT.	NO.	LIN. FT.	NO.	LIN. FT.	NO.	LIN. FT.	NO.	LIN. FT.	NO.	LIN. FT.	NO.	LIN. FT.	
6	2.4	5	7'-2½"	4	2'-11"	5	4'-4"	2	7'-0"	4	3'-8"	4	2'-6"	5	1'-0"	133
8	2.8	9	7'-2½"	4	2'-11"	5	6'-4"	2	9'-0"	4	5'-8"	4	2'-6"	7	1'-0"	202
10	3.2	13	7'-2½"	4	2'-11"	5	8'-4"	2	11'-0"	4	7'-8"	4	2'-6"	9	1'-0"	270
12	3.6	17	7'-2½"	4	2'-11"	5	10'-4"	2	13'-0"	4	9'-8"	4	2'-6"	11	1'-0"	338
14	4.0	21	7'-2½"	4	2'-11"	5	12'-4"	2	15'-0"	4	11'-8"	4	2'-6"	13	1'-0"	406
16	4.4	25	7'-2½"	4	2'-11"	5	14'-4"	2	17'-0"	4	13'-8"	4	2'-6"	15	1'-0"	475
18	4.8	29	7'-2½"	4	2'-11"	5	16'-4"	2	19'-0"	4	15'-8"	4	2'-6"	17	1'-0"	543
20	5.2	33	7'-2½"	4	2'-11"	5	18'-4"	2	21'-0"	4	17'-8"	4	2'-6"	19	1'-0"	611

NOTE:— The above table of quantities is included with this drawing for estimating purposes only. The cost of furnishing and placing all concrete, reinforcing steel, casting, etc. shall be included in Item I-8 for payment.

BUREAU OF LOCATION AND DESIGN
OHIO DEPARTMENT OF HIGHWAYS

PAVED SHOULDER INLETS

DATE 4-23-59

STANDARD CONSTRUCTION DRAWING

I-8 I.
No. 2-A

APPROVED [signature] ENGR. L. & D.