STANDARD MANHOLE

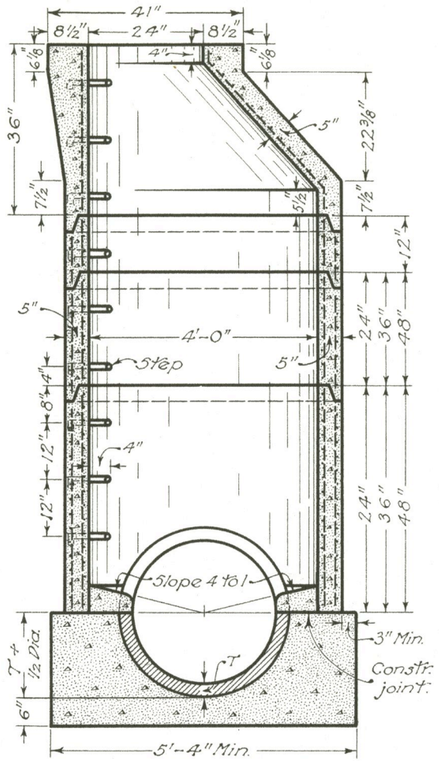

SECTION

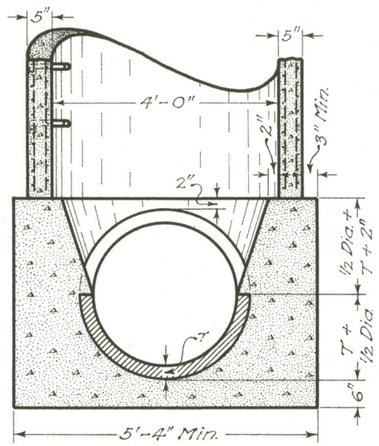

ALTERNATE MANHOLE BASE

PRECAST MANHOLE ON SEWERS 42" AND UNDER

Not to be used on manholes with depth greater than 12 ft. from top of frame casting to flow line of outlet pipe.

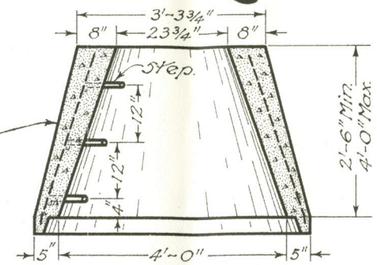

SECTION

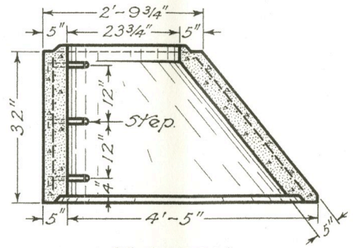

SECTION

DOME ALTERNATES

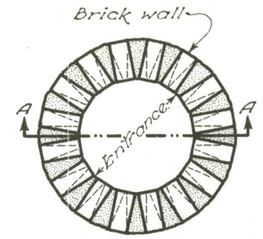

PLAN

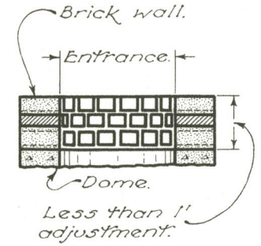

SEC. A-A

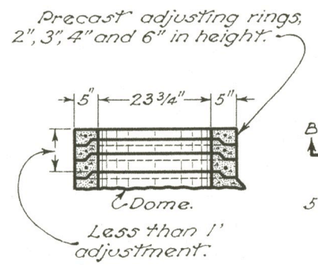

SEC. B-B

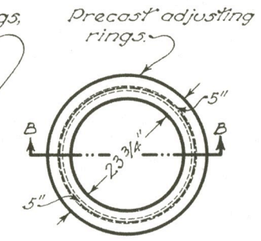

PLAN

ALTERNATE METHODS OF ADJUSTING TO GRADE

NOTES

GENERAL:— Precast reinforced concrete manholes detailed on this drawing may be used in lieu of the design shown on Standard Drawings I-8 M.H. No. 1 and I-8 M.H. No. 2.

Openings for the inlet and outlet sewer pipe shall be cast in the precast ring unless the manhole base is built to an elevation two inches above the top of the outlet pipe.

Openings for pipes 18" diameter or less entering the manhole above the spring line of the outlet sewer may be cut in the field provided the portion of the pipe (15" or 18" diam.) inside the manhole is cut to fit the circumference of the manhole. Pipes over 18" diameter entering the manhole above the spring line of the outlet sewer shall be connected to the manhole by a Tee connection precast with the barrel of the manhole.

All joints of pipe openings in the manhole shall be throughly calked with cement mortar or other suitable material to prevent infiltration of earth into the manhole.

Domes shall be precast using concrete of the same quality as specified for the precast rings and shall have at least one line of steel reinforcement with a minimum cross sectional area of 0.116 sq. in. per lineal foot of dome. 1½" holes for handling may be cast in the dome and rings.

Drop pipes for No. 2 manholes shall be constructed as shown on Standard Drawing I-8 M.H. No. 2.

MATERIALS:— Concrete for the manhole base and connection box shall be Class C.

Precast reinforced concrete rings 48 inches in diameter shall meet the strength and design requirements for 48 inch standard reinforced concrete sewer pipe section M-6.6(a) for No. 1 manholes and 48 inch standard strength reinforced concrete culvert pipe section M-6.6(b) for No. 2 manholes.

Steps and castings shall be as specified on Standard Drawing I-8 M.H. No. 1.

CONNECTION BOXES:— Connection boxes for sewers 48 inches and over in diameter shall be reinforced as shown and as specified below:—

A bars shall be spaced at 12" centers.
B bars shall be spaced at 3" centers.
A and B bar sizes.
5/8" ϕ for 48" to 60" sewers.
¾" ϕ for 66" to 78" sewers.
⅞" ϕ for 84" to 96" sewers.

All other transverse steel to be 5/8" ϕ at 12" centers.

All other longitudinal steel to be 5/8" ϕ at 18" centers.

Reinforcing steel shall have 2 inch clearance except where otherwise specified.

ADJUSTING RINGS:— Precast adjusting rings shall be reinforced with one No. 3 gage wire or equivalent.

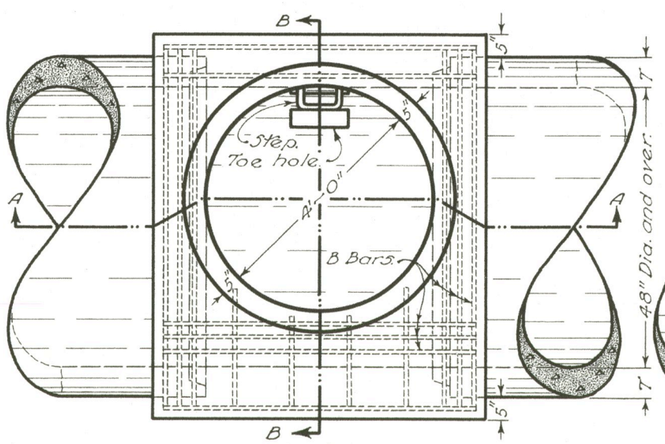

PLAN

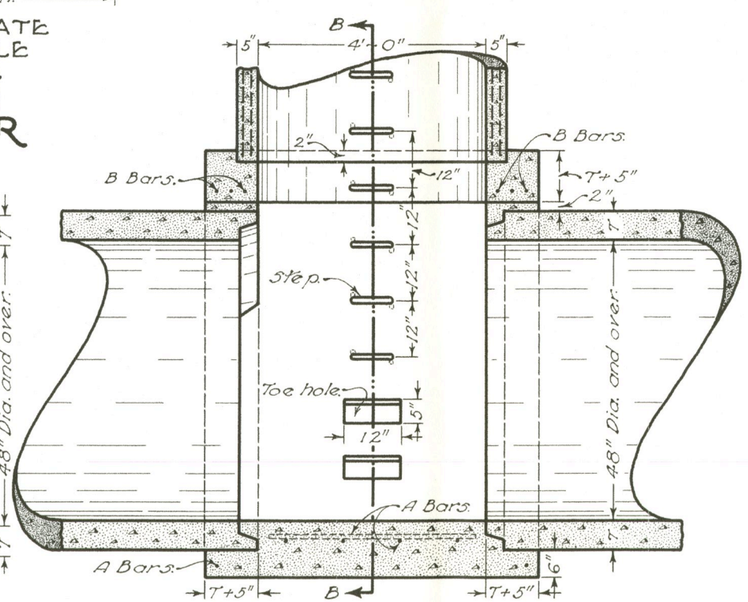

SECTION A-A

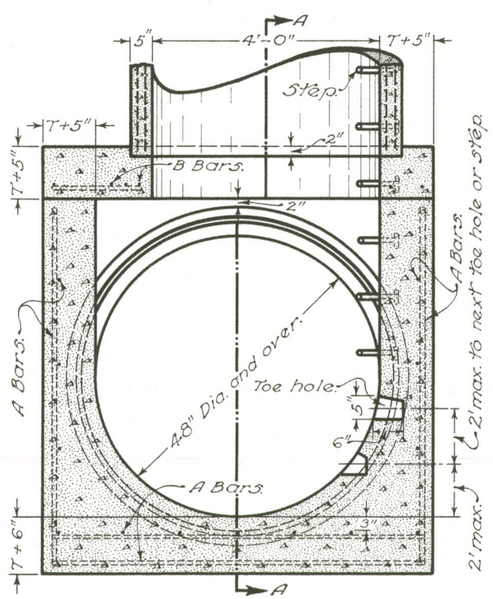

SECTION B-B

CONNECTION BOX FOR PRECAST MANHOLES ON SEWERS 48" AND OVER

BUREAU OF LOCATION AND DESIGN
OHIO DEPARTMENT OF HIGHWAYS

STANDARD MANHOLE

DATE 6-1-54

STANDARD CONSTRUCTION DRAWING

I-8 M.H. No. 1-A

APPROVED ENGINEER LOCATION & DESIGN

STANDARD MANHOLE

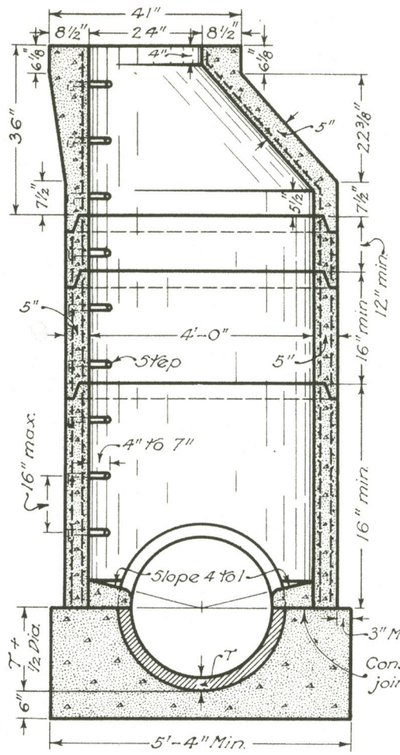

SECTION

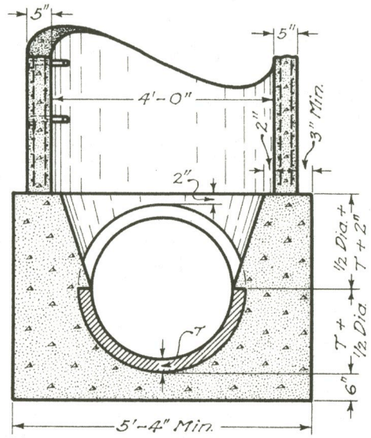

ALTERNATE MANHOLE BASE

PRECAST MANHOLE ON SEWERS 42" AND UNDER

Not to be used on manholes with depth greater than 12 ft. from top of frame casting to flow line of outlet pipe.

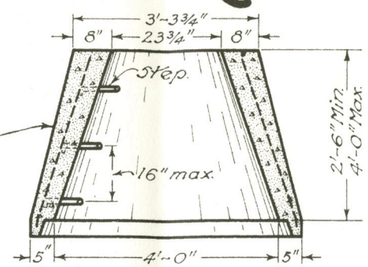

SECTION

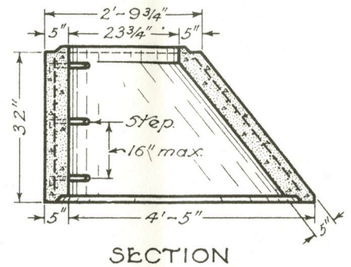

SECTION

DOME ALTERNATES

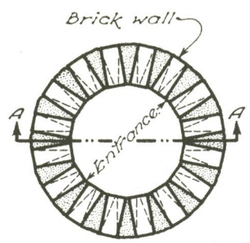

PLAN

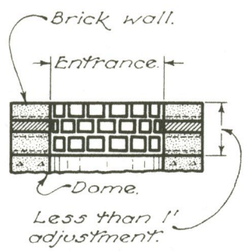

SEC. A–A

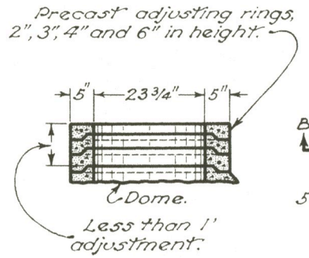

SEC. B–B

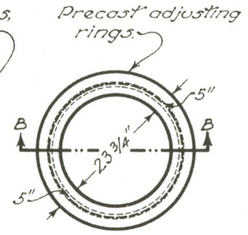

PLAN

ALTERNATE METHODS OF ADJUSTING TO GRADE

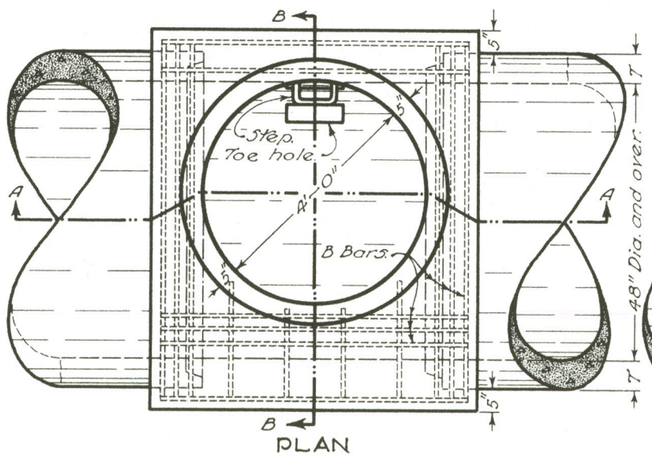

PLAN

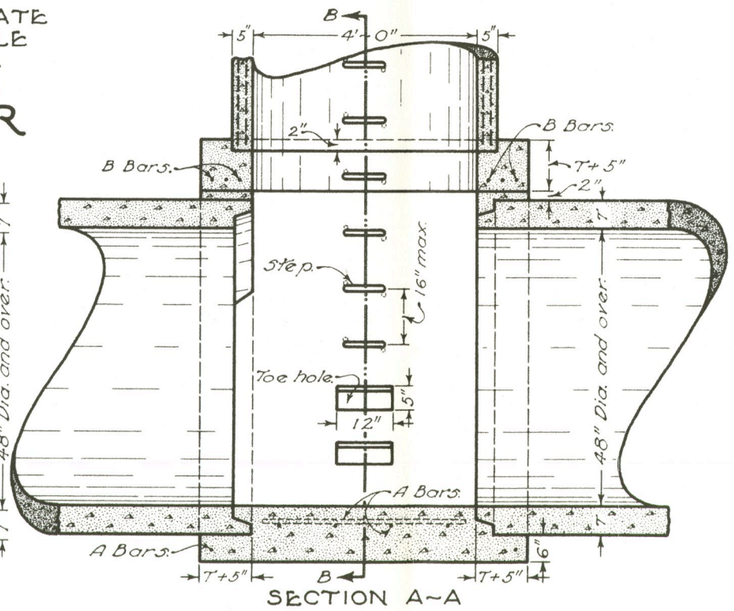

SECTION A–A

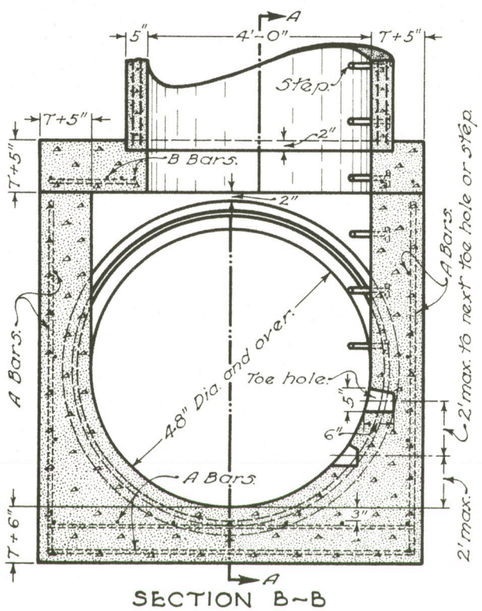

SECTION B–B

CONNECTION BOX FOR PRECAST MANHOLES ON SEWERS 48" AND OVER

NOTES

GENERAL:– Precast reinforced concrete manholes detailed on this drawing may be used in lieu of the design shown on Standard Drawings I-8 M.H. No. 1 and I-8 M.H. No. 2.

Openings for the inlet and outlet sewer pipe shall be cast in the precast ring unless the manhole base is built to an elevation two inches above the top of the outlet pipe.

Openings for pipes 18" diameter or less entering the manhole above the spring line of the outlet sewer may be cut in the field provided the portion of the pipe (15" or 18" diam.) inside the manhole is cut to fit the circumference of the manhole. Pipes over 18" diameter entering the manhole above the spring line of the outlet sewer shall be connected to the manhole by a Tee connection precast with the barrel of the manhole.

All joints at pipe openings in the manhole shall be throughly calked with cement mortar or other suitable material to prevent infiltration of earth into the manhole.

Domes shall be precast using concrete of the same quality as specified for the precast rings and shall have at least one line of steel reinforcement with a minimum cross sectional area of 0.116 sq. in. per lineal foot of dome. 1¼" holes for handling may be cast in the dome and rings.

Drop pipes for No. 2 manholes shall be constructed as shown on Standard Drawing I-8 M.H. No. 2.

MATERIALS:– Concrete for the manhole base and connection box shall be Class C.

Precast reinforced concrete rings 48 inches in diameter shall meet the strength and design requirements for 48 inch standard reinforced concrete sewer pipe section M-6.6(a) for No. 1 manholes and 48 inch standard strength reinforced concrete culvert pipe section M-6.6(b) for No. 2 manholes.

Steps and castings shall be as specified on Standard Drawing I-8 M.H. No. 1.

CONNECTION BOXES:– Connection boxes for sewers 48 inches and over in diameter shall be reinforced as shown and as specified below:–

A bars shall be spaced at 12" centers.
B bars shall be spaced at 3" centers.
A and B bar sizes.
5/8" ϕ for 48" to 60" sewers.
¾" ϕ for 66" to 78" sewers.
⅞" ϕ for 84" to 96" sewers.

All other transverse steel to be 5/8" ϕ at 12" centers.

All other longitudinal steel to be 5/8" ϕ at 18" centers.

Reinforcing steel shall have 2 inch clearance except where otherwise specified.

ADJUSTING RINGS:– Precast adjusting rings shall be reinforced with one No. 3 gage wire or equivalent.

BUREAU OF LOCATION AND DESIGN
OHIO DEPARTMENT OF HIGHWAYS

STANDARD MANHOLE

DATE: 6-1-54 1-3-55

STANDARD CONSTRUCTION DRAWING

I-8 M.H. No. 1-A

APPROVED [illegible] ENGINEER LOCATION & DESIGN

STANDARD MANHOLE

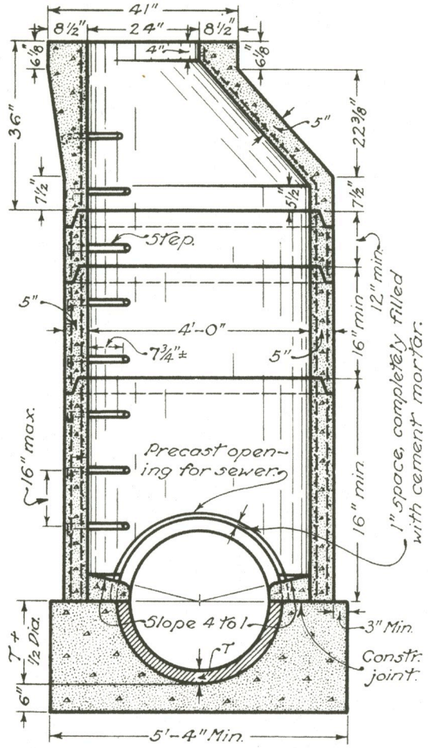

SECTION

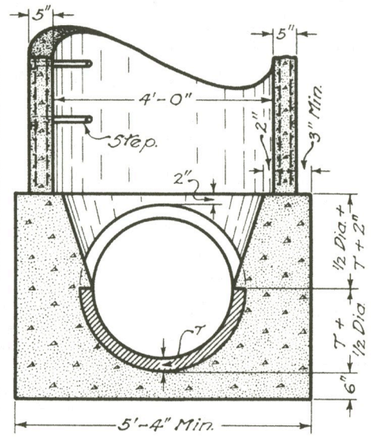

ALTERNATE MANHOLE BASE

PRECAST MANHOLE ON SEWERS 42" AND UNDER

Not to be used on manholes with depth greater than 12 ft. from top of frame casting to flow line of outlet pipe.

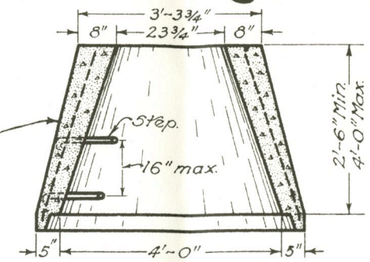

SECTION

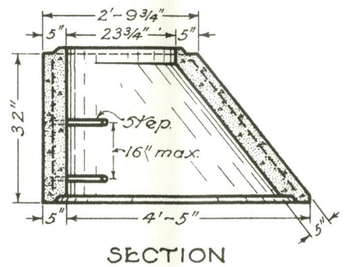

SECTION

DOME ALTERNATES

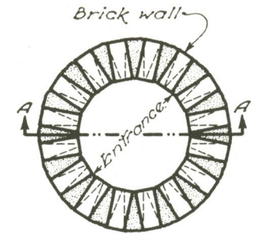

PLAN

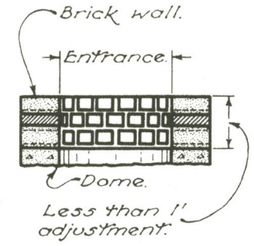

SEC. A–A

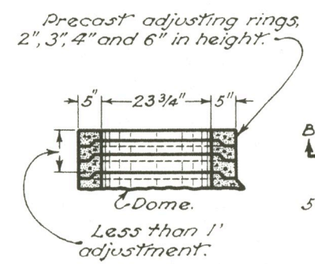

SEC. B–B

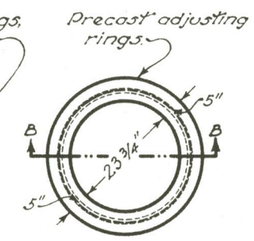

PLAN

ALTERNATE METHODS OF ADJUSTING TO GRADE

NOTES

GENERAL:– Precast reinforced concrete manholes detailed on this drawing may be used in lieu of the design shown on Standard Drawings I-8 M.H. No. 1 and I-8 M.H. No. 2.

Openings for the inlet and outlet sewer pipe shall be cast in the precast ring unless the manhole base is built to an elevation two inches above the top of the outlet pipe.

Openings for pipes 18" diameter or less entering the manhole above the spring line of the outlet sewer may be cut in the field provided the portion of the pipe (15" or 18" diam.) inside the manhole is cut to fit the circumference of the manhole. Pipes over 18" diameter entering the manhole above the spring line of the outlet sewer shall be connected to the manhole by a Tee connection precast with the barrel of the manhole.

All joints of pipe openings in the manhole shall be throughly calked with cement mortar or other suitable material to prevent infiltration of earth into the manhole.

Domes shall be precast using concrete of the same quality as specified for the precast rings and shall have at least one line of steel reinforcement with a minimum cross sectional area of 0.116 sq. in. per lineal foot of dome. 1¼" holes for handling may be cast in the dome and rings.

Drop pipes when required shall be constructed as shown on Standard Drawing I-8 M.H. No. 2.

MATERIALS:– Concrete for the manhole base and connection box shall be Class "C".

Precast reinforced concrete riser rings 48 inches in diameter shall meet the strength and design requirements for 48 inch Section M-6.6 reinforced concrete pipe and the minimum strength furnished shall vary with the manhole depth measured from top of casting to lowest outlet flow line in accordance with the following table:–

DEPTH	RISER PIPE CLASS
Less than 12'	M-6.6 (a)
12' to 20'	M-6.6 (b)
Over 20'	M-6.6 (c)

Steps and castings shall be as specified on Standard Drawing I-8 M.H. No. 1 or I-8 M.H. No. 2.

CONNECTION BOXES for sewers 48 inches and over in diameter shall be reinforced as shown and as specified below:–

A bars shall be spaced at 12" centers in both directions.

B bars shall be spaced at 3" centers in both directions.

A, B and L bar sizes:–

5/8" ϕ for 48" to 60" sewers.
3/4" ϕ for 66" to 78" sewers.
7/8" ϕ for 84" to 96" sewers.

T bars shall be 5/8" ϕ spaced at 12" centers.

D bars shall be 5/8" ϕ.

Reinforcing steel shall have 2 inch clearance except where otherwise specified.

ADJUSTING RINGS, precast, shall be reinforced with one No. 3 gage wire or equivalent.

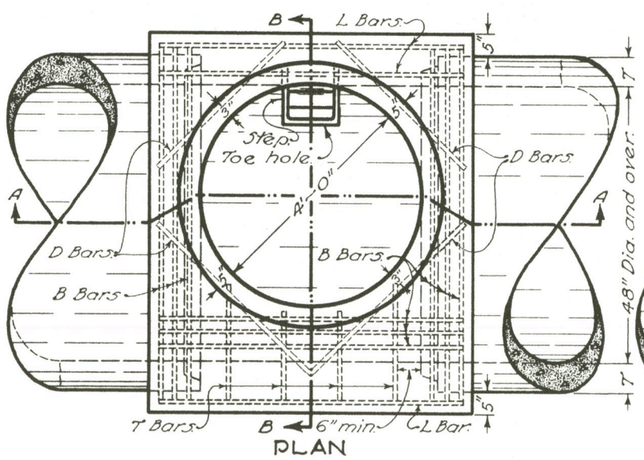

PLAN

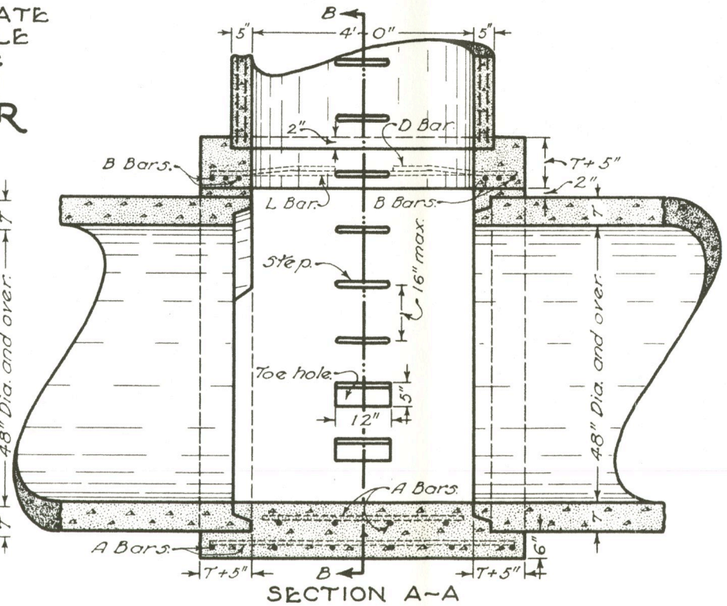

SECTION A–A

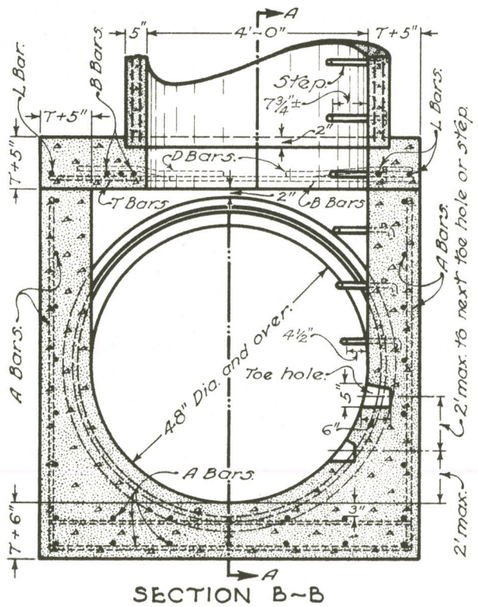

SECTION B–B

CONNECTION BOX FOR PRECAST MANHOLES ON SEWERS 48" AND OVER

BUREAU OF LOCATION AND DESIGN
OHIO DEPARTMENT OF HIGHWAYS

STANDARD MANHOLE

STANDARD CONSTRUCTION DRAWING — I-8 M.H. No. I-A

APPROVED [signature] ENGR., L. & D.

DATE: 6-1-54, 1-3-55, 1-26-59

STANDARD MANHOLE

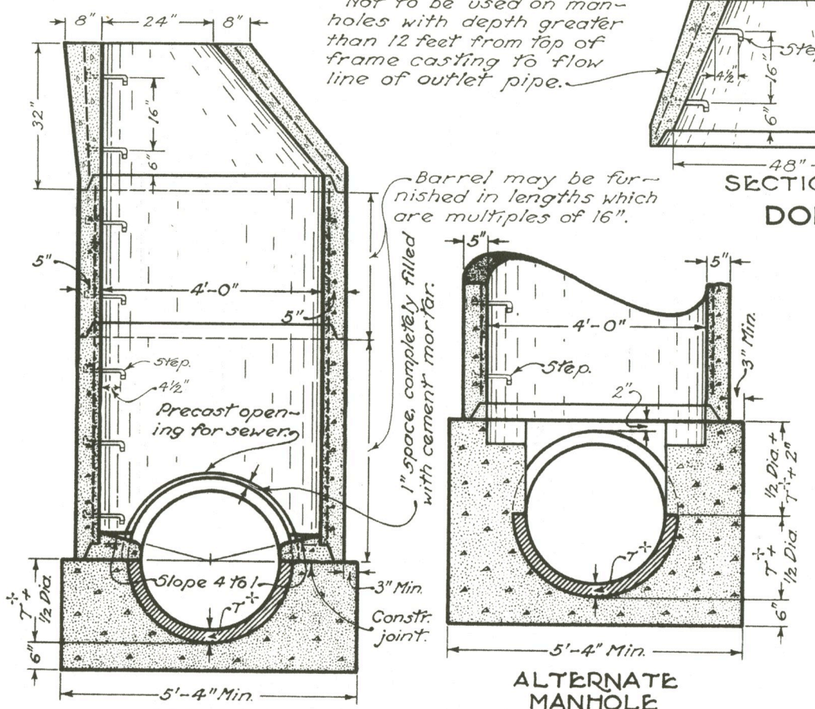

PRECAST MANHOLE ON SEWERS 42" AND UNDER

Not to be used on manholes with depth greater than 12 feet from top of frame casting to flow line of outlet pipe.

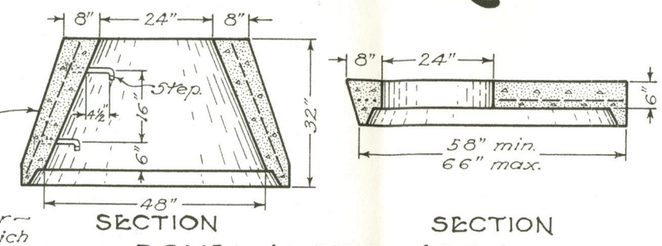

DOME ALTERNATES

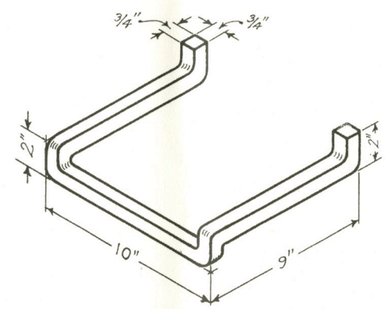

STEP DETAIL

T + Represents thickness of concrete pipe.

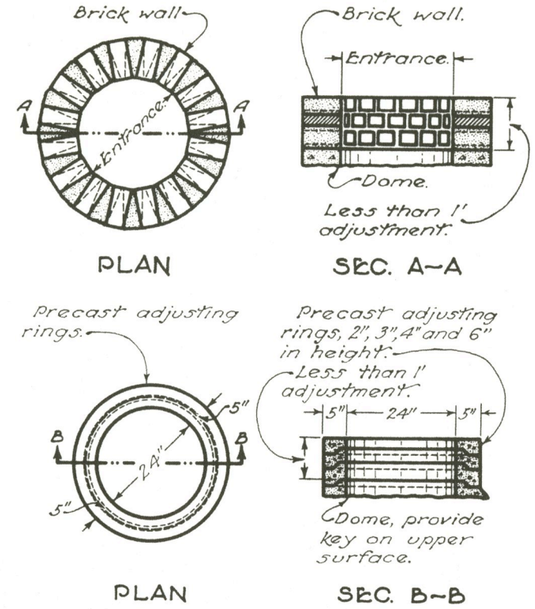

ALTERNATE METHODS OF ADJUSTING TO GRADE

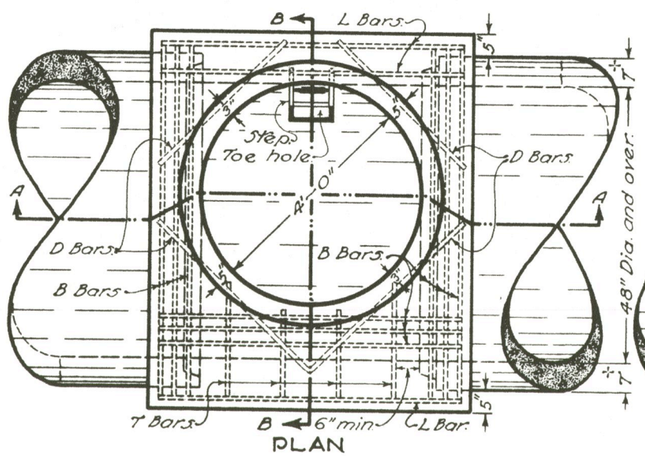

PLAN

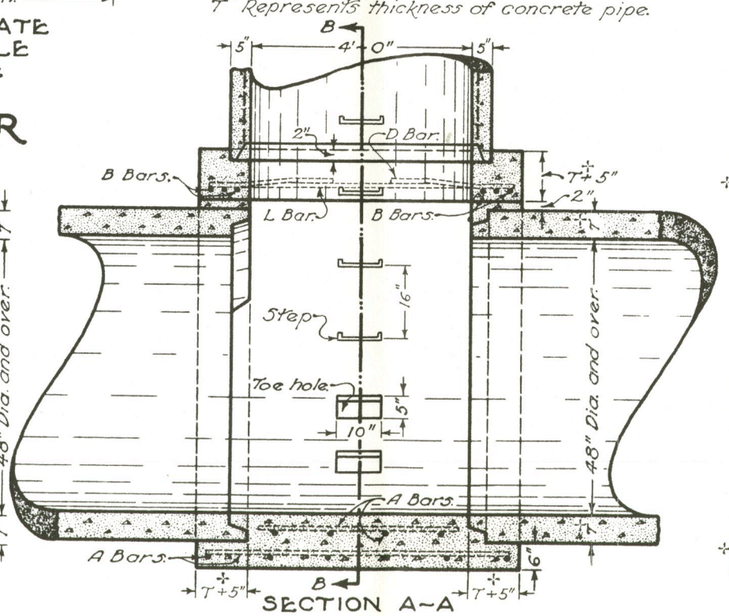

SECTION A-A

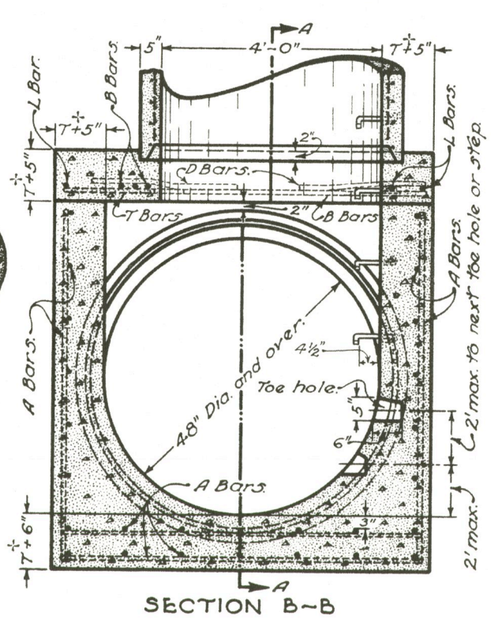

SECTION B-B

CONNECTION BOX FOR PRECAST MANHOLES ON SEWERS 48" AND OVER

T + Represents thickness of concrete pipe.

NOTES

GENERAL:— Precast reinforced concrete manholes detailed on this drawing may be used in lieu of the design shown on Standard Drawings I-8 M.H. No. 1 and I-8 M.H. No. 2.

Openings for the inlet and outlet sewer pipe shall be cast in the precast ring unless the manhole base is built to an elevation two inches above the top of the outlet pipe.

Openings for pipes 18" diameter or less entering the manhole above the spring line of the outlet sewer may be cut in the field provided the portion of the pipe (15" or 18" diam.) inside the manhole is cut to fit the circumference of the manhole. Pipes over 18" diameter entering the manhole above the spring line of the outlet sewer shall be connected to the manhole by a Tee connection precast with the barrel of the manhole.

All joints of pipe openings in the manhole shall be throughly calked with cement mortar or other suitable material to prevent infiltration of earth into the manhole.

Drop pipes when required shall be constructed as shown on Standard Drawing I-8 M.H. No. 2.

MATERIALS:— Concrete for the manhole base and connection box shall be Class "C".

Precast reinforced concrete riser rings and domes shall comply with the requirements of Sec. M-6.6, except for Minimum Designs and Marking. Minimum wall thickness shall be 5 inches and circular reinforcement shall be 0.18 sq. in. per foot minimum. Concrete shall have a minimum strength of 4,000 pounds per square inch. 1¼" holes for handling may be cast in domes and rings. The following shall be clearly stenciled or impressed on each riser ring:—

a. MH
b. The date of manufacture
c. The name or trade-mark of the manufacturer and location of the plant.

Steps shall be wrought iron or nodular iron meeting the requirements of Item I-8 and shall be given one coat of paint Sec. M-9.18 or Sec. M-9.19. Castings shall be as specified on Standard Drawing I-8 M.H. No. 1 or I-8 M.H. No. 2.

CONNECTION BOXES for sewers 48 inches and over in diameter shall be reinforced as shown and as specified below:—

A bars shall be spaced at 12" centers in both directions.

B bars shall be spaced at 3" centers in both directions.

A, B and L bar sizes:—
- 5/8" ϕ for 48" to 60" sewers.
- 3/4" ϕ for 66" to 78" sewers.
- 7/8" ϕ for 84" to 96" sewers.

T bars shall be 5/8" ϕ spaced at 12" centers.

D bars shall be 5/8" ϕ.

Reinforcing steel shall have 2 inch clearance except where otherwise specified.

ADJUSTING RINGS, precast, shall be reinforced with one No. 3 gage wire or equivalent.

BUREAU OF LOCATION AND DESIGN
OHIO DEPARTMENT OF HIGHWAYS

STANDARD MANHOLE

STANDARD CONSTRUCTION DRAWING

I-8 M.H. No. I-A

APPROVED [signature] ENGR., L. & D.

DATE: 6-1-54, 1-3-55, 1-26-59, 2-1-61

STANDARD MANHOLE

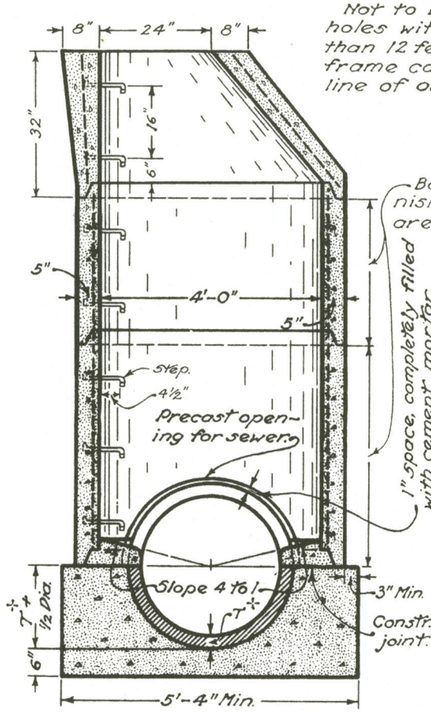

SECTION

Not to be used on manholes with depth greater than 12 feet from top of frame casting to flow line of outlet pipe.

Barrel may be furnished in lengths which are multiples of 16".

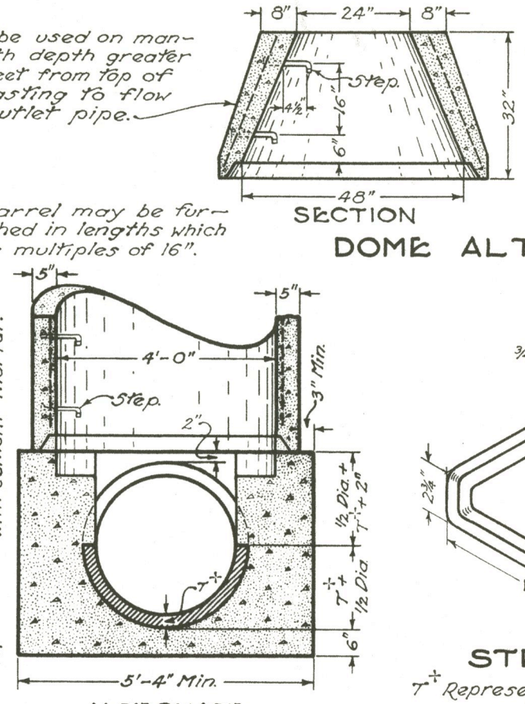

ALTERNATE MANHOLE BASE

PRECAST MANHOLE ON SEWERS 42" AND UNDER

SECTION

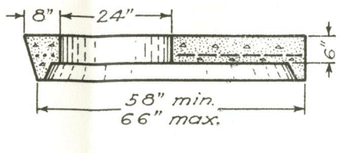

SECTION

DOME ALTERNATES

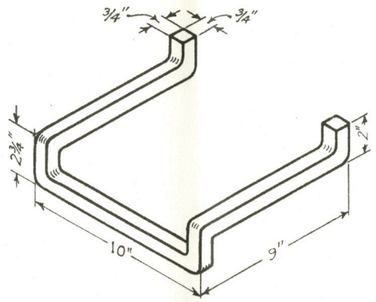

STEP DETAIL

T+ Represents thickness of concrete pipe.

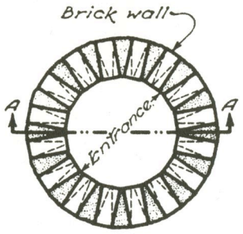

PLAN

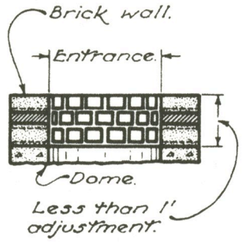

SEC. A–A

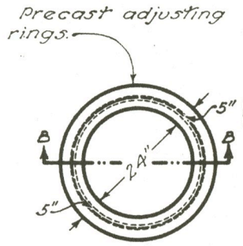

PLAN

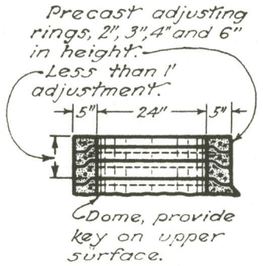

SEC. B–B

ALTERNATE METHODS OF ADJUSTING TO GRADE

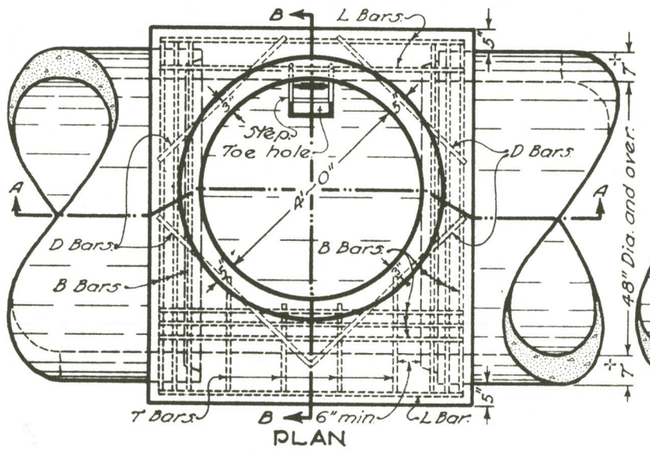

PLAN

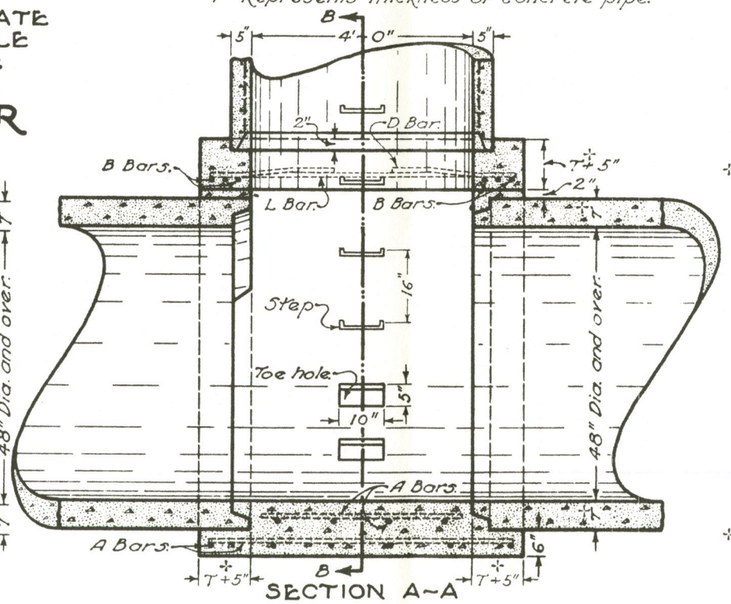

SECTION A–A

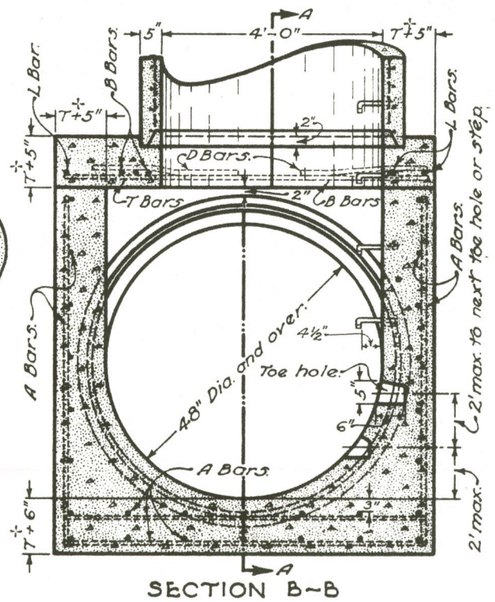

SECTION B–B

CONNECTION BOX FOR PRECAST MANHOLES ON SEWERS 48" AND OVER

NOTES

GENERAL:—Precast reinforced concrete manholes detailed on this drawing may be used in lieu of the design shown on Standard Drawings I-8 M.H. No. 1 and I-8 M.H. No. 2.

Openings for the inlet and outlet sewer pipe shall be cast in the precast ring unless the manhole base is built to an elevation two inches above the top of the outlet pipe.

Openings for pipes 18" diameter or less entering the manhole above the spring line of the outlet sewer may be cut in the field provided the portion of the pipe (15" or 18" diam.) inside the manhole is cut to fit the circumference of the manhole. Pipes over 18" diameter entering the manhole above the spring line of the outlet sewer shall be connected to the manhole by a Tee connection precast with the barrel of the manhole.

All joints of pipe openings in the manhole shall be throughly calked with cement mortar or other suitable material to prevent infiltration of earth into the manhole.

Drop pipes when required shall be constructed as shown on Standard Drawing I-8 M.H. No. 2.

MATERIALS:—Concrete for the manhole base and connection box shall be Class "C".

Precast reinforced concrete riser rings and domes shall comply with the requirements of Sec. M-6.6, except for Minimum Designs and Marking. Minimum wall thickness shall be 5 inches and circular reinforcement shall be 0.18 sq. in. per foot minimum. Concrete shall have a minimum strength of 4,000 pounds per square inch. 1¼" holes for handling may be cast in domes and rings. The following shall be clearly stenciled or impressed on each riser ring:—

a. MH
b. The date of manufacture
c. The name or trade-mark of the manufacturer and location of the plant.

Steps shall be wrought iron or nodular iron meeting the requirements of Item 748 ~~and shall meet requirements of paint Section 718 or Sec. 719~~. Castings shall be as specified on Standard Drawing I-8 M.H. No. 1 or I-8 M.H. No. 2.

CONNECTION BOXES for sewers 48 inches and over in diameter shall be reinforced as shown and as specified below:—

A bars shall be spaced at 12" centers in both directions.

B bars shall be spaced at 3" centers in both directions.

A, B and L bar sizes:—

5/8" ϕ for 48" to 60" sewers.
3/4" ϕ for 66" to 78" sewers.
7/8" ϕ for 84" to 96" sewers.

T bars shall be 5/8" ϕ spaced at 12" centers.
D bars shall be 5/8" ϕ.

Reinforcing steel shall have 2 inch clearance except where otherwise specified.

ADJUSTING RINGS, precast, shall be reinforced with one No. 3 gage wire or equivalent.

BUREAU OF LOCATION AND DESIGN
OHIO DEPARTMENT OF HIGHWAYS

STANDARD MANHOLE

STANDARD CONSTRUCTION DRAWING — I-8 M.H. No. I-A

DATE 2-1-'61 10-2-'61

APPROVED [signature] ENGR., L. & D.

STANDARD MANHOLE

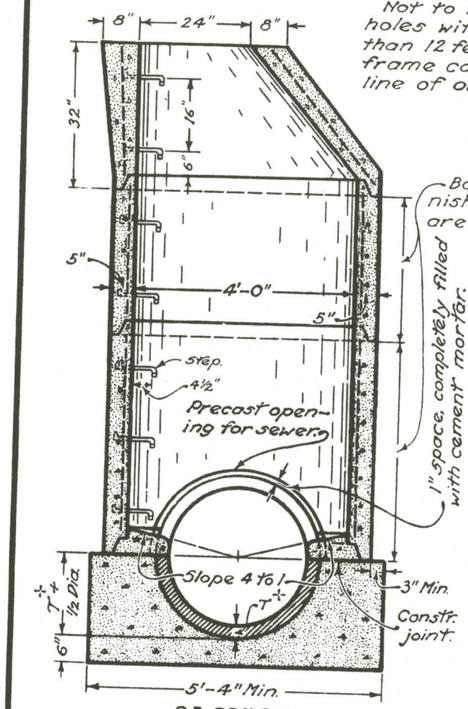

SECTION

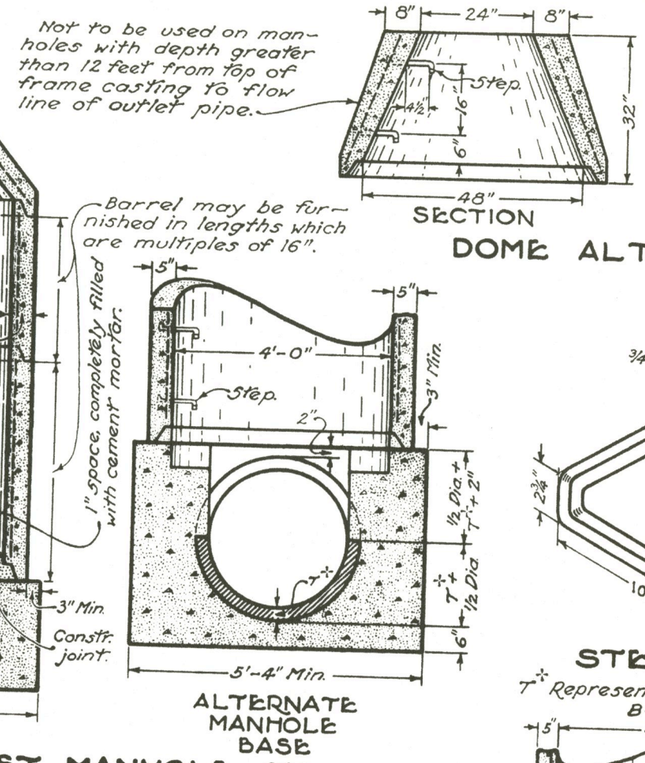

ALTERNATE MANHOLE BASE

PRECAST MANHOLE ON SEWERS 42" AND UNDER

Not to be used on manholes with depth greater than 12 feet from top of frame casting to flow line of outlet pipe.

SECTION

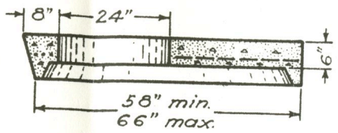

SECTION

DOME ALTERNATES

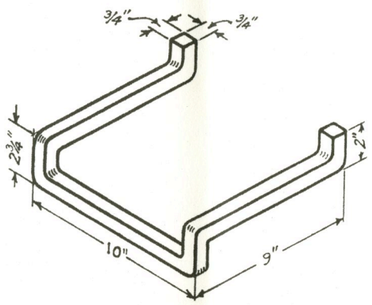

STEP DETAIL

T+ Represents thickness of concrete pipe.

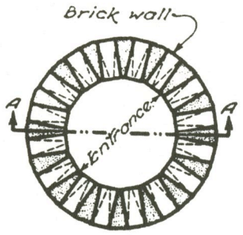

PLAN

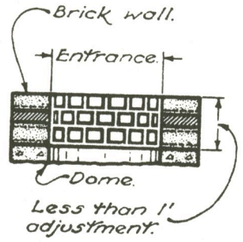

SEC. A–A

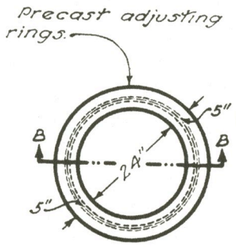

PLAN

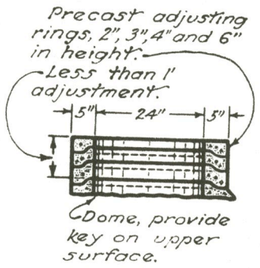

SEC. B–B

ALTERNATE METHODS OF ADJUSTING TO GRADE

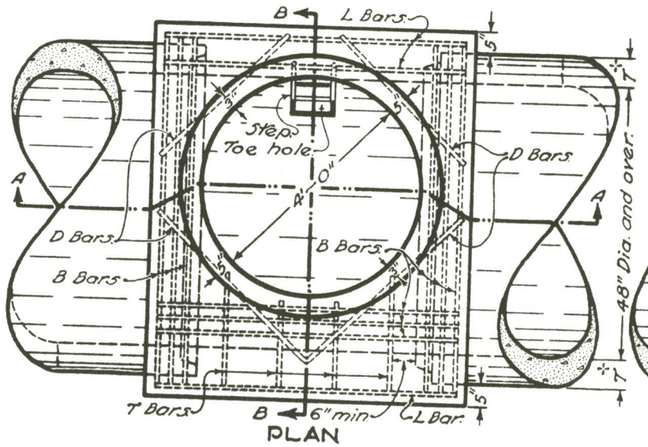

PLAN

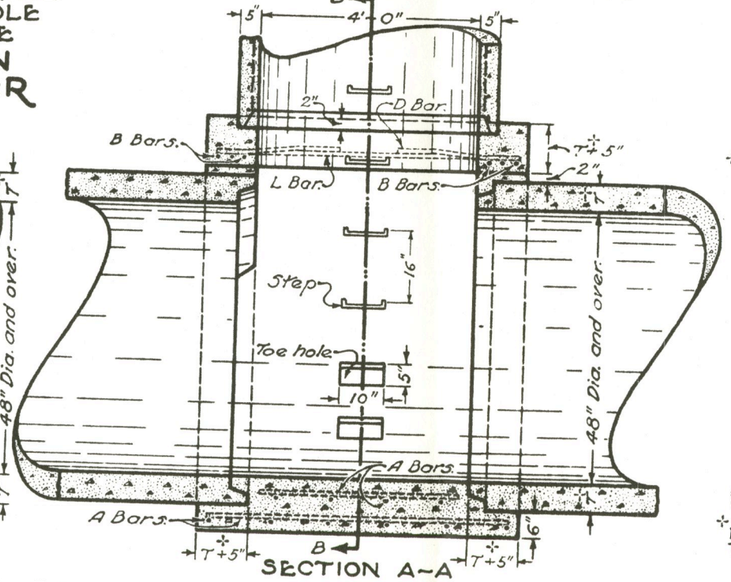

SECTION A–A

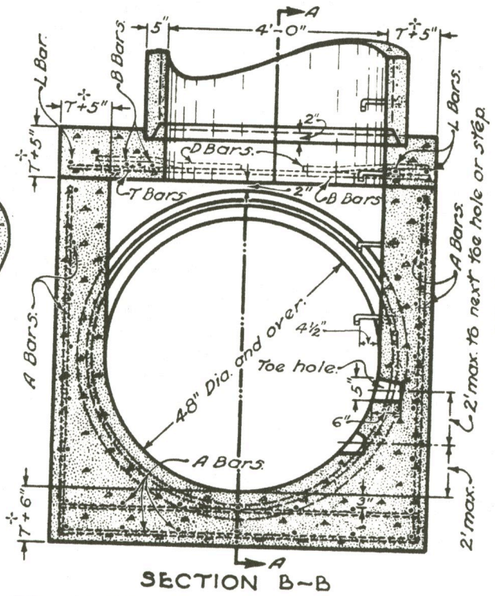

SECTION B–B

CONNECTION BOX FOR PRECAST MANHOLES ON SEWERS 48" AND OVER

NOTES

GENERAL:– Precast reinforced concrete manholes detailed on this drawing may be used in lieu of the design shown on Standard Drawings I-8 M.H. No. 1 and I-8 M.H. No. 2.

Openings for the inlet and outlet sewer pipe shall be cast in the precast ring unless the manhole base is built to an elevation two inches above the top of the outlet pipe.

Openings for pipes 18" diameter or less entering the manhole above the spring line of the outlet sewer may be cut in the field provided the portion of the pipe (15" or 18" diam.) inside the manhole is cut to fit the circumference of the manhole. Pipes over 18" diameter entering the manhole above the spring line of the outlet sewer shall be connected to the manhole by a Tee connection precast with the barrel of the manhole.

All joints at pipe openings in the manhole shall be throughly calked with cement mortar or other suitable material to prevent infiltration of earth into the manhole.

Drop pipes when required shall be constructed as shown on Standard Drawing I-8 M.H. No. 2.

MATERIALS:– Concrete for the manhole base and connection box shall be Class "C".

Precast reinforced concrete riser rings and domes shall comply with the requirements of Sec. M-6.6, except for Minimum Designs and Marking. Minimum wall thickness shall be 5 inches and circular reinforcement shall be 0.18 sq. in. per foot minimum. Concrete shall have a minimum strength of 4,000 pounds per square inch. 1¼" holes for handling may be cast in domes and rings. The following shall be clearly stenciled or impressed on each riser ring:–

a. MH
b. The date of manufacture
c. The name or trade-mark of the manufacturer and location of the plant.

Steps shall be wrought iron or nodular iron meeting the requirements of Item I-8.

Castings shall be as specified on Standard Drawing I-8 M.H. No. 1 or I-8 M.H. No. 2.

CONNECTION BOXES for sewers 48 inches and over in diameter shall be reinforced as shown and as specified below:–

A bars shall be spaced at 12" centers in both directions.

B bars shall be spaced at 3" centers in both directions.

A, B and L bar sizes:–
- 5/8" ϕ for 48" to 60" sewers.
- 3/4" ϕ for 66" to 78" sewers.
- 7/8" ϕ for 84" to 96" sewers.

T bars shall be 5/8" ϕ spaced at 12" centers.

D bars shall be 5/8" ϕ.

Reinforcing steel shall have 2 inch clearance except where otherwise specified.

ADJUSTING RINGS, precast, shall be reinforced with one No. 3 gage wire or equivalent.

BUREAU OF LOCATION AND DESIGN
OHIO DEPARTMENT OF HIGHWAYS

STANDARD MANHOLE

STANDARD CONSTRUCTION DRAWING I-8 M.H. No. I-A

APPROVED R. N. Ricketts ENGR., L. & D.

DATE
2-1-'61
10-2-'61
2-1-63